Product Description: Belt Disc Sander
Model Number: 3376-01
Body Number: 0200008027
Version: A
Issue Date: 2013/02/04

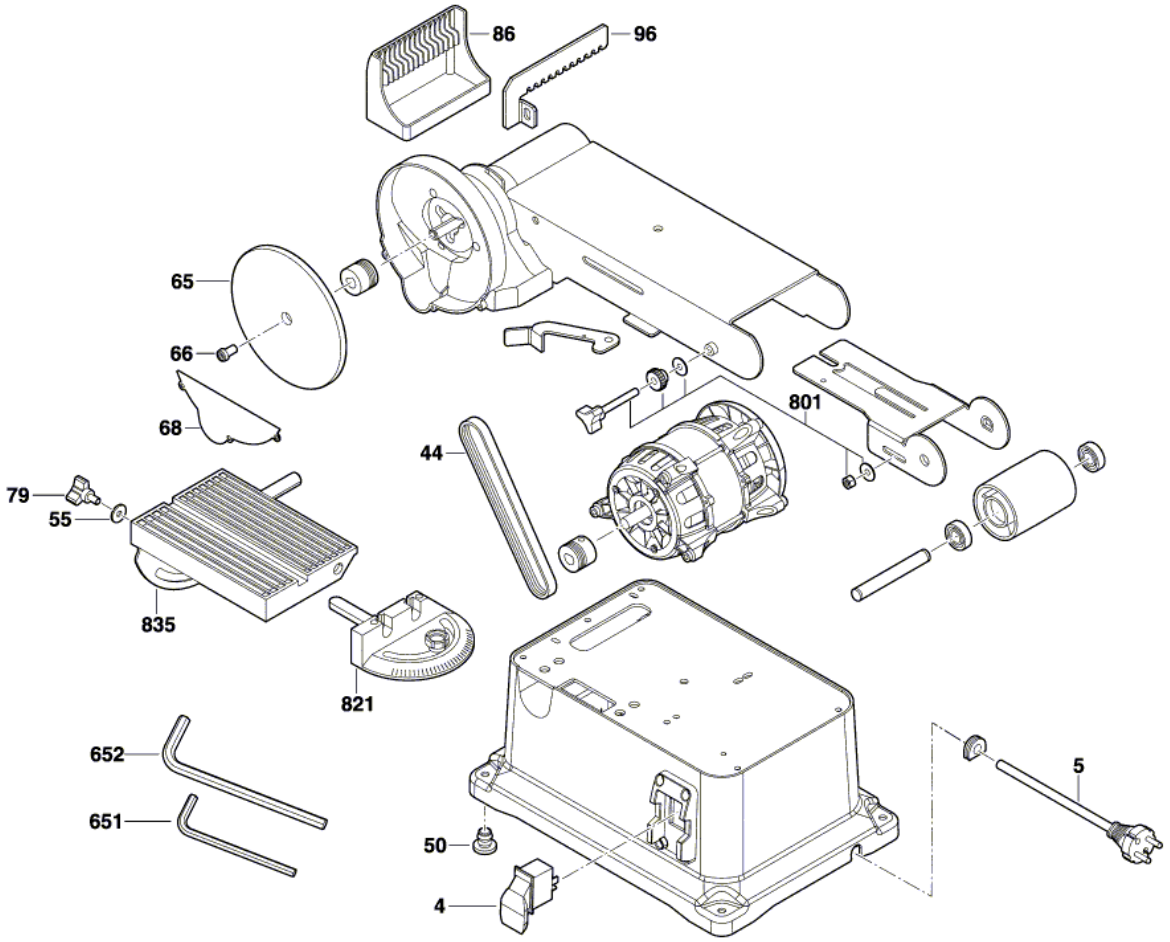

No.	Product Model#	Part Number	Description	Qty
4	3376-01	4870696050	Switch	1
5	3376-01	4810237036	Cord	1
44	3376-01	3130253365	Belt	1
50	3376-01	3130253366	Rubber	4
55	3376-01	5650710134	Washer	2
65	3376-01	5650710135	Washer	1
66	3376-01	5610361266	Pan head screw	1
68	3376-01	3130253367	Cover	1
79	3376-01	3130253368	Knob	1
86	3376-01	3130253369	Cover	1
96	3376-01	3130253370	Support	1
651	3376-01	5680258026	Turn buckle	1
652	3376-01	5680258027	Turn buckle	1
801	3376-01	2826622177	Vertical Adjustment	1
821	3376-01	2826622178	Guide	1
835	3376-01	2826622179	Table	1