Product Description: Band Saw
Model Number: 3386-01
Body Number: 0200008026
Version: A
Issue Date: 2011/09/16

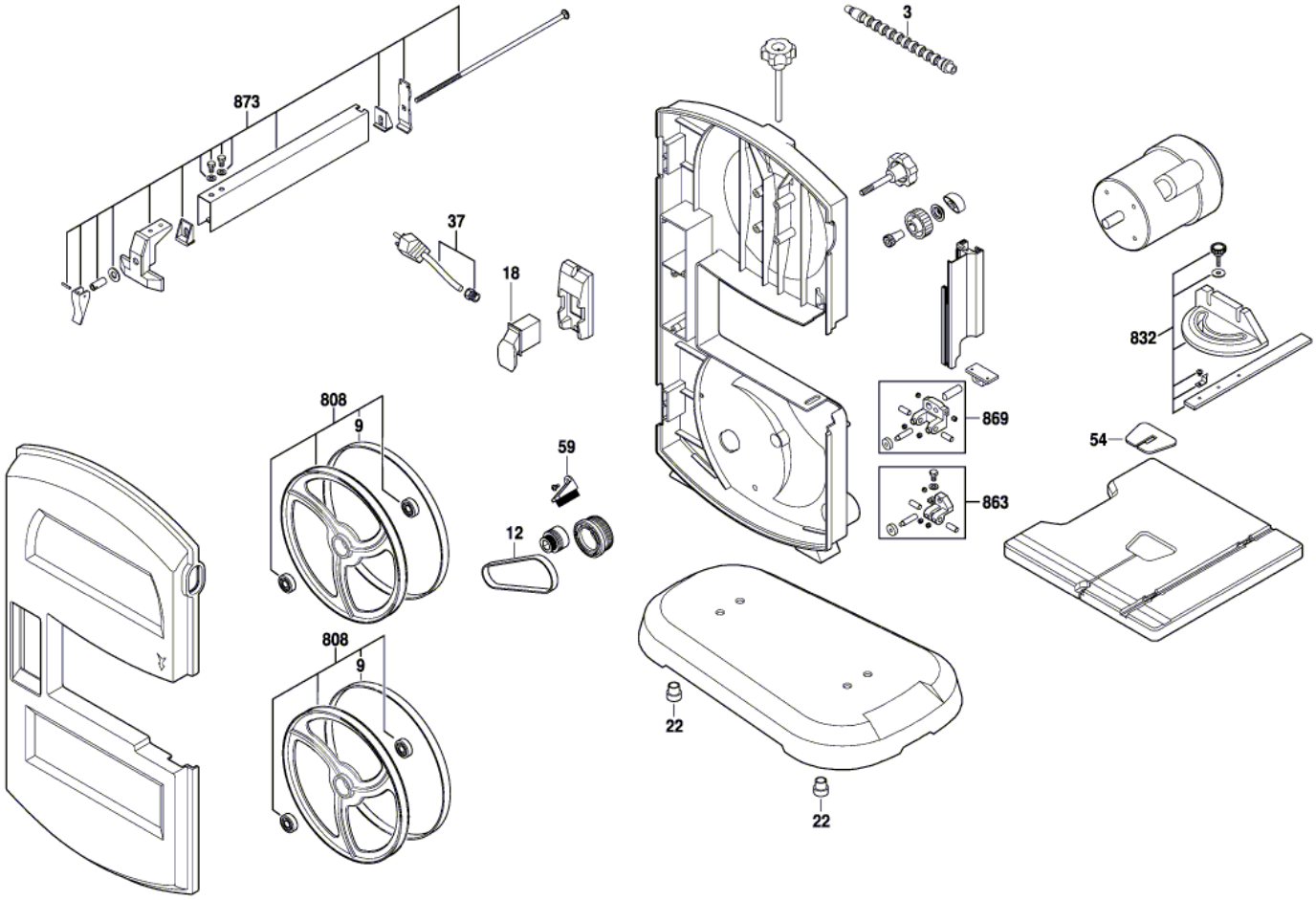

No.	Product Model#	Part Number	Description	Qty
3	3386-01	4980009004	LED lamp	1
9	3386-01	3130253361	Wheel tire	2
12	3386-01	3130253362	Belt	1
18	3386-01	4870696049	Switch	1
22	3386-01	3130253363	Stand Foot	4
37	3386-01	4810237035	Power supply cord	1
54	3386-01	3422506055	Insert	1
59	3386-01	3130253364	Brush	1
808	3386-01	2826622172	Wheel Set	1
832	3386-01	2826622173	Mitre Gauge	1
863	3386-01	2826622174	Blade Guide	1
869	3386-01	2826622175	Blade Guide	1
873	3386-01	2826622176	Rip Fence	1