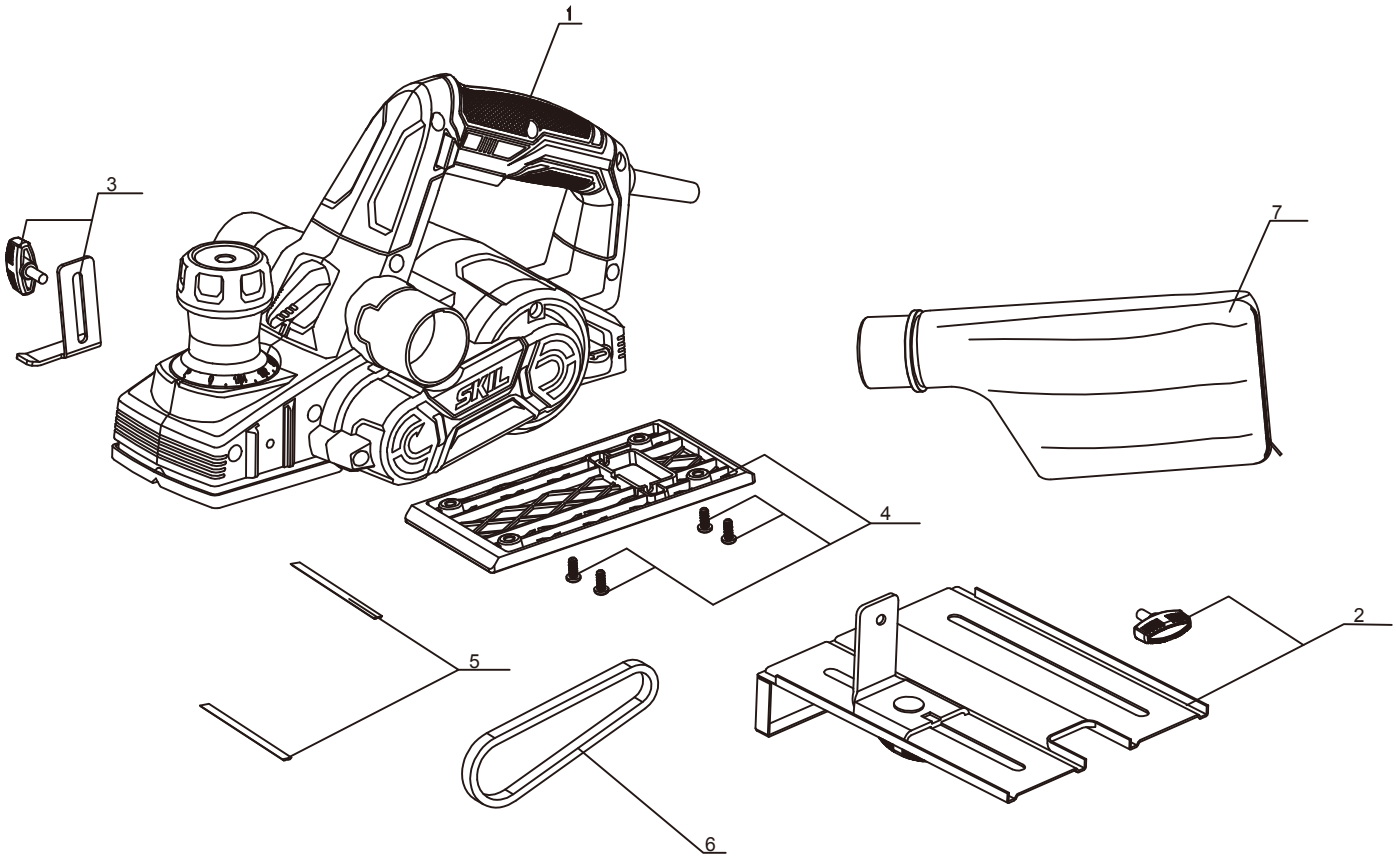Product Description: Planer
Model Number: PL201201
Body Number: 0070111006
Version: A
Issue Date: 2019/07/08